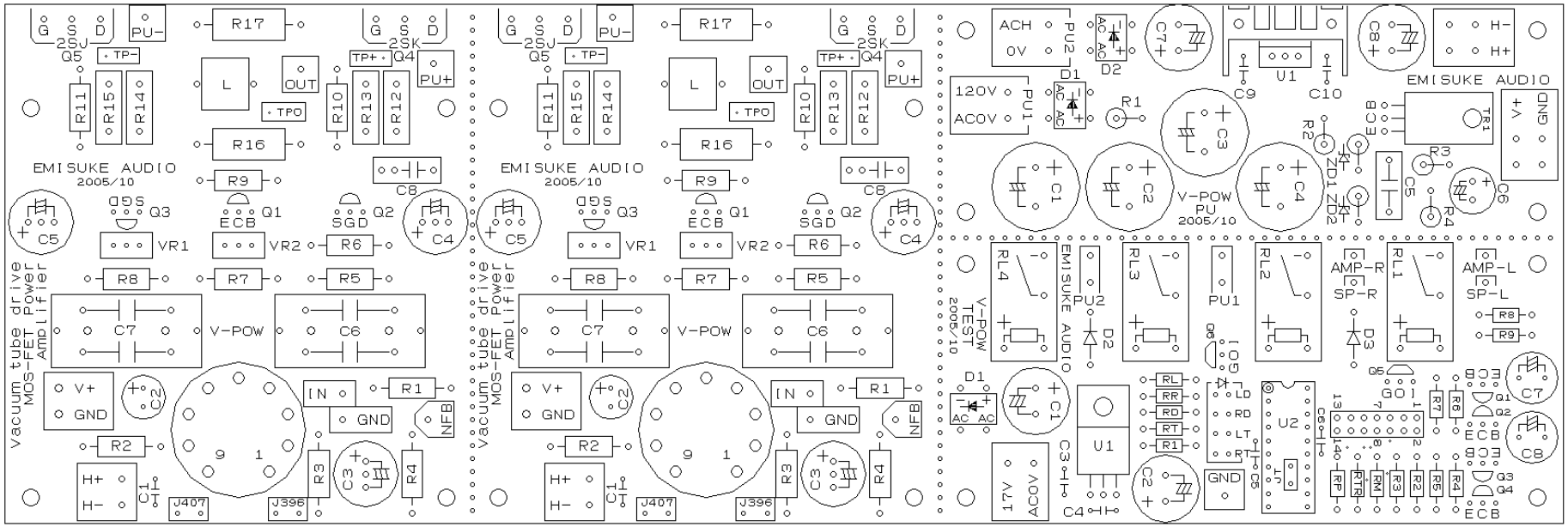
Vacuum tube drive
MOS-FET Power
Amplifier
EMISUKE AUDIO
2005/10
V-POW
V-POW
TEST
PU
2005/10
2SJ
2SK
Q5
Q4
Q3
Q1
Q2
VR1
VR2
R17
R16
R15
R14
R13
R12
R11
R10
R9
R8
R7
R6
R5
R4
R3
R2
R1
C1
C2
C3
C4
C5
C6
C7
C8
C9
C10
L
OUT
IN
GND
V+
H+
H-
NFB
PU-
PU+
TP-
TP+
J407
J396
ACH
0V
120V
ACOV
PU1
PU2
D1
D2
U1
U2
TR1
ZD1
ZD2
RL1
RL2
RL3
RL4
AMP-R
SP-R
AMP-L
SP-L
RL
RR
RD
RT
LD
LT
17V
ALT
J1