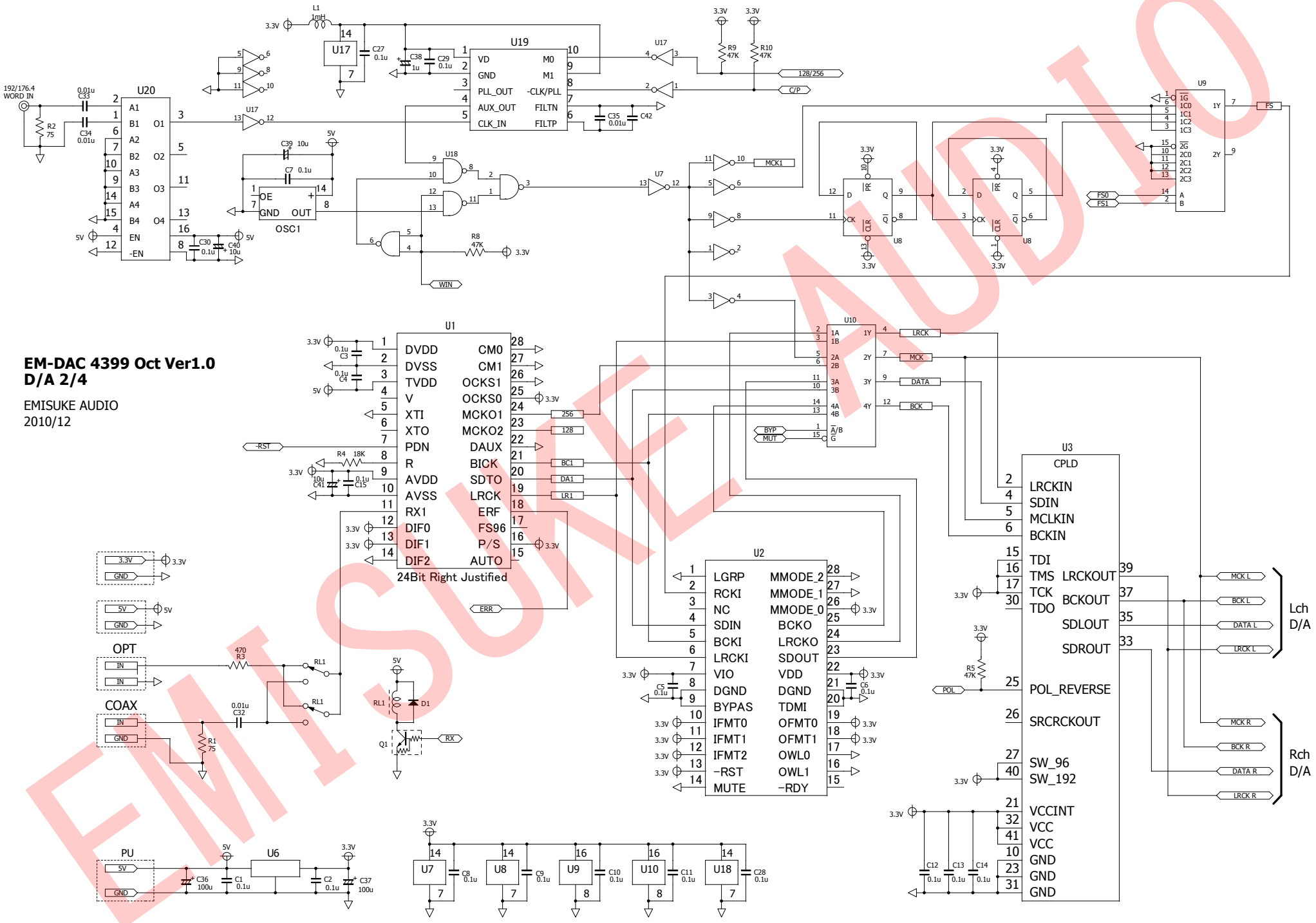
EM-DAC 4399 Oct Ver1.0
D/A 2/4
EMISUKE AUDIO
2010/12
U19
VD
GND
PLL_OUT
AUX_OUT
CLK_IN
M0
M1
-CLK/PLL
FILTN
FILTP
U20
192/176.4
WORD IN
OSC1
U1
DVDD
DVSS
TVDD
V
XTI
XTO
PDN
R
AVDD
AVSS
RX1
DIF0
DIF1
DIF2
CM0
CM1
OCKS1
OCKS0
MCKO1
MCKO2
DAUX
BICK
SDTO
LRCK
ERF
FS96
P/S
AUTO
24Bit Right Justified
U2
LGRP
RCKI
NC
SDIN
BCKI
LRCKI
VIO
DGND
BYPAS
IFMT0
IFMT1
IFMT2
-RST
MUTE
MMODE_2
MMODE_1
MMODE_0
BCKO
LRCKO
SDOUT
VDD
DGND
TDMI
OFMT0
OFMT1
OWL0
OWL1
-RDY
U3
CPLD
LRCKIN
SDIN
MCLKIN
BCKIN
TDI
TMS
TCK
TDO
LRCKOUT
BCKOUT
SDLOUT
SDROUT
POL_REVERSE
SRCRCKOUT
SW_96
SW_192
VCCINT
VCC
GND
Lch
D/A
Rch
D/A
OPT
COAX
PU
U6
U7
U8
U9
U10
U18
U17
128/256
C/P
FS
FS0
FS1
MCK1
LRCK
MCK
DATA
BCK
BYP
MUT
256
128
BC1
DA1
LR1
ERR
RX
WIN
POL
-RST
EMISUKE AUDIO