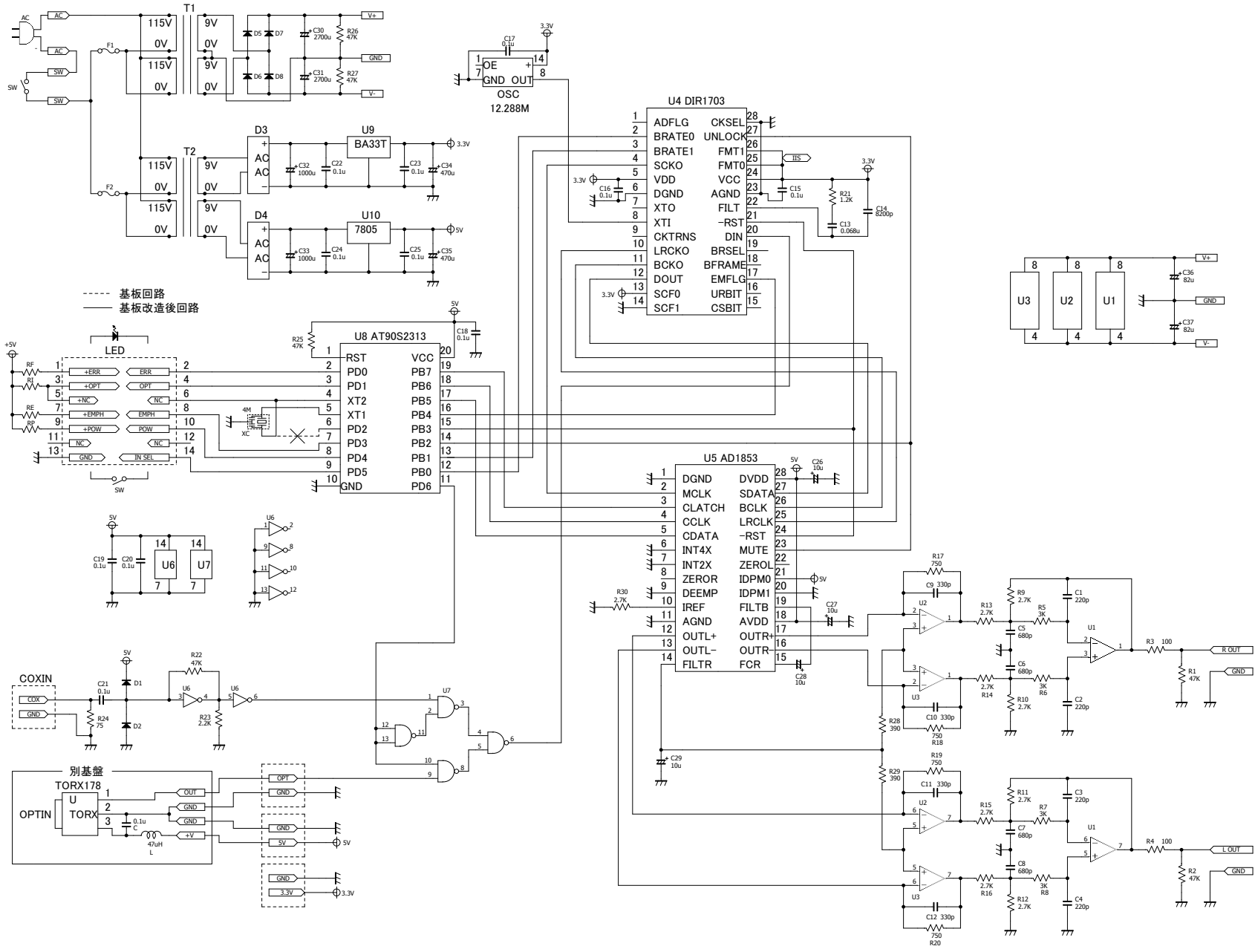
T1
T2
D3
D4
U9
BA33T
U10
7805
OSC
12.288M
U4 DIR1703
ADFLG
BRATE0
BRATE1
SCKO
VDD
DGND
XTO
XTI
CKTRNS
LRCKO
BCKO
DOUT
SCF0
SCF1
CKSEL
UNLOCK
FMT1
FMT0
VCC
AGND
FILT
-RST
DIN
BRSEL
BFRAME
EMFLG
URBIT
CSBIT
基板回路
基板改造後回路
LED
U8 AT90S2313
RST
PD0
PD1
XT2
XT1
PD2
PD3
PD4
PD5
GND
VCC
PB7
PB6
PB5
PB4
PB3
PB2
PB1
PB0
PD6
U5 AD1853
DGND
MCLK
CLATCH
CCLK
CDATA
INT4X
INT2X
ZEROR
DEEMP
IREF
AGND
OUTL+
OUTL-
FILTR
DVDD
SDATA
BCLK
LRCLK
-RST
MUTE
ZEROL
IDPM0
IDPM1
FILTB
AVDD
OUTR+
OUTR-
FCR
COXIN
別基盤
TORX178
OPTIN
R OUT
L OUT