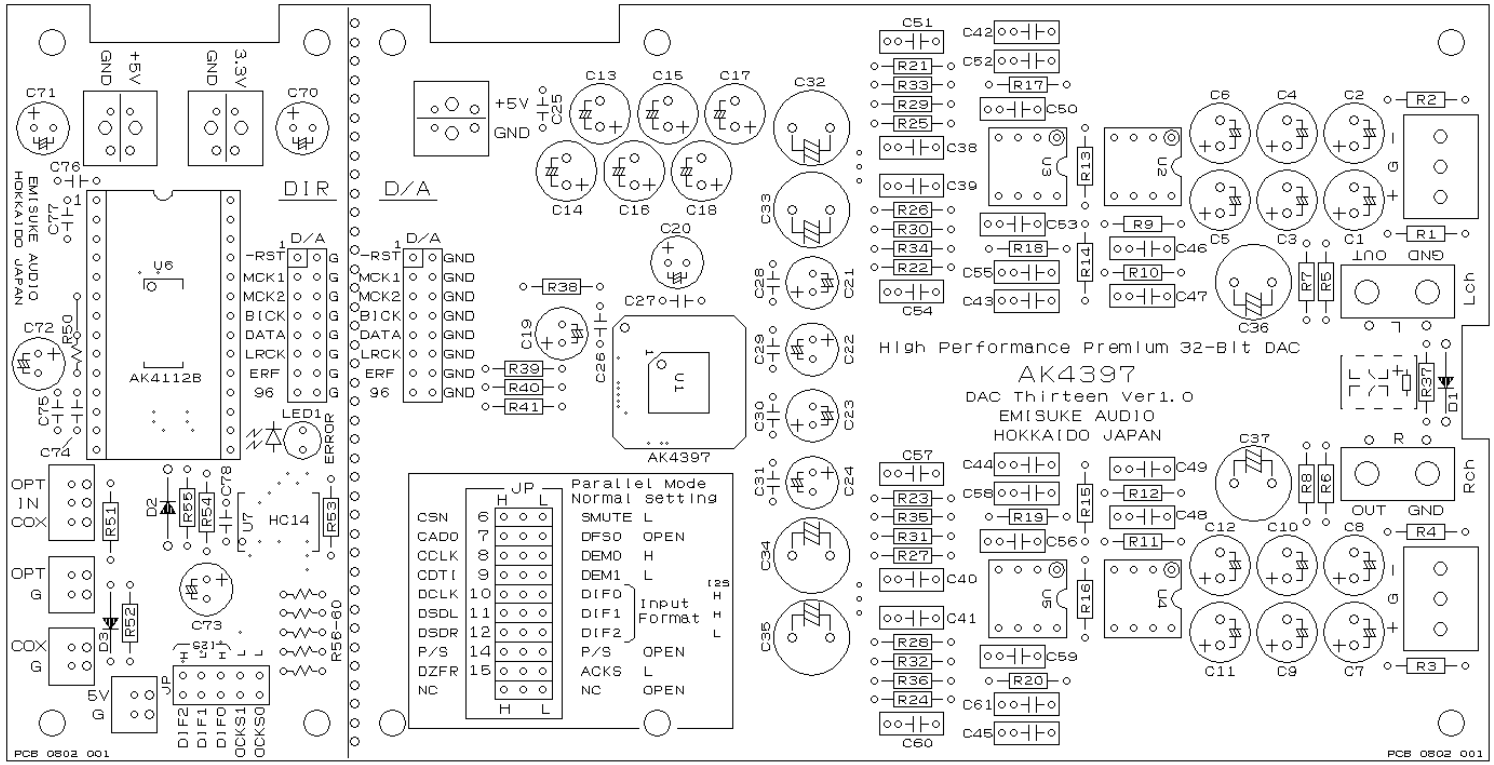
High Performance Premium 32-Bit DAC
AK4397
DAC Thirteen Ver1.0
EMISUKE AUDIO
HOKKAIDO JAPAN
EMISUKE AUDIO
HOKKAIDO JAPAN
DIR
D/A
AK4112B
AK4397
Parallel Mode
Normal setting
CSN 6 SMUTE L
CAD0 7 DFS0 OPEN
CCLK 8 DEM0 H
CDTI 9 DEM1 L
DCLK 10 DIF0
DSDL 11 DIF1
DSDR 12 DIF2
P/S 14 P/S OPEN
DZFR 15 ACKS L
NC NC OPEN
Input Format
Lch
Rch
OUT
GND
PCB 0802 001
PCB 0802 001